SONY

ICX038BLA

1/2 inch CCD Image Sensor for EIA B/W Camera

Description

ICX038BLA is an interline transfer CCD solid-state imager suitable for EIA 1/2 inch B/W video cameras. High sensitiveness is achieved through the adoption of HAD (Hole-Accumulation Diode) sensors.

This chip features a field integration read out system, an electronic shutter with variable charge-storage time and 20 pin Cer-DIP package.

20 pin DIP (Cer-DIP)

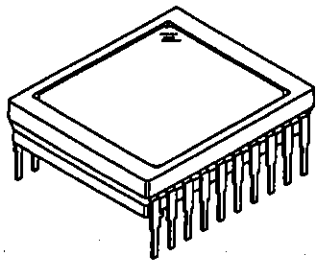

Features

- High image, high sensitivity and low dark current (+6dB compare with ICX038ALA)
- Consecutive various speed shutter
  1/60s. (Typ.), 1/100s. to 1/10000s.
- Low smear
- High antiblooming
- Horizontal register 5V drive
- Reset gate 5V drive

Device Structure

- Optical size 1/2 inch format
- Number of effective pixels 768 (H) ×494 (V) Approx. 380k pixels
- Number of total pixels 811(H) ×508 (V) Approx. 410k pixels
- Interline transfer CCD image sensor
- Chip size 7.95mm (H) ×6.45mm (V)
- Unit cell size 8.4 µm (H) ×9.8 µm (V)
- Optical black Horizontal (H) direction Front 3 pixels Rear 40 pixels
  Vertical (V) direction Front 12 pixels Rear 2 pixels
- Number of dummy bits Horizontal 22
  Vertical 1 (even field only)
- Substrate material Silicon

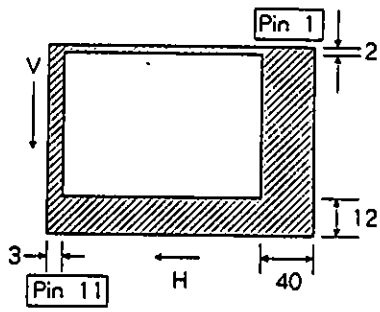

Optical black position (Top View)

Sony reserves the right to change products and specifications without prior notice. This information does not convey any license by any implication or otherwise under any patents or other right. Application circuits shown, if any, are typical examples illustrating the operation of the devices. Sony cannot assume responsibility for any problems arising out of the use of these circuits.

E91932C6Y—PS

Block Diagram

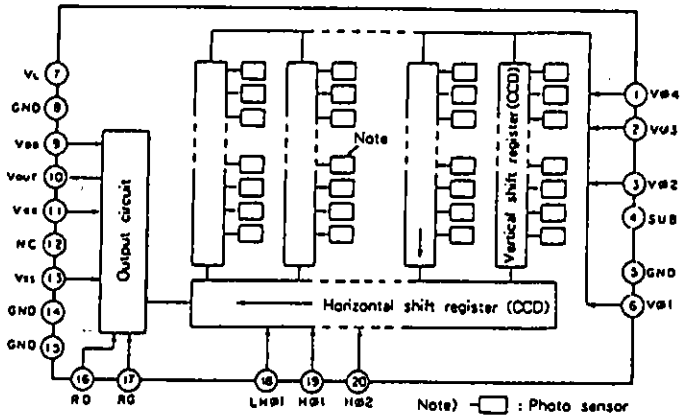

Pin Configuration

(Top View)

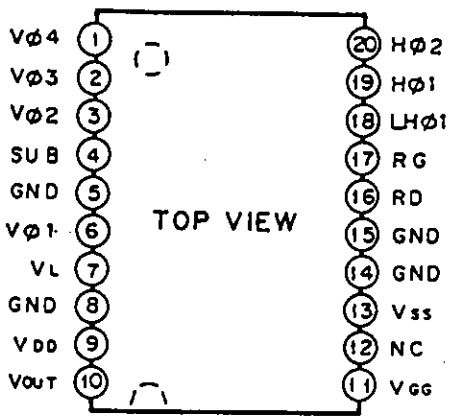

Pin Description

No.	Symbol	Description	No.	Symbol	Description
1	$V\phi_4$	Vertical register transfer clock	11	V_{GG}	Output amplifier gate bias
2	$V\phi_3$	Vertical register transfer clock	12	NC	
3	$V\phi_2$	Vertical register transfer clock	13	Vss	Output amplifier source
4	SUB	Substrate (Overflow drain)	14	GND	GND
5	GND	GND	15	GND	GND
6	$V\phi_1$	Vertical register transfer clock	16	RD	Reset drain bias
7	V_L	Protective transistor bias	17	RG	Reset gate clock
8	GND	GND	18	$LH\phi_1$	Horizontal register final stage transfer clock
9	V_{DD}	Output amplifier drain supply	19	$H\phi_1$	Horizontal register transfer clock
10	V_{OUT}	Signal output	20	$H\phi_2$	Horizontal register transfer clock

Absolute Maximum Ratings

Item		Ratings	Unit	Remarks
Substrate voltage SUB-GND		–0.3 to +55	V	
Supply voltage	V_{DD}, V_{RD}, V_{OUT}, Vss – GND	–0.3 to +18	V	
	V_{DD}, V_{RD}, V_{OUT}, Vss – SUB	–55 to +10	V	
Clock input voltage	$V\phi_1$, $V\phi_2$, $V\phi_3$, $V\phi_4$ – GND	–15 to +20	V	
	$V\phi_1$, $V\phi_2$, $V\phi_3$, $V\phi_4$ – SUB	to +10	V	
Voltage difference between vertical clock input pins		to+15	V	* (Max.)
Voltage difference between horizontal clock input pins		to+17	V	
$H\phi_1$, $H\phi_2$ – $V\phi_4$		–17 to +17	V	
$LH\phi_1$, RG, V_{GG} – GND		–10 to +15	V	
$LH\phi_1$, RG, V_{GG} – SUB		–55 to +10	V	
V_L – SUB		–65 to +0.3	V	
Beside GND, SUB-V_L		–0.3 to +30	V	
Storage temperature		–30 to +80	°C	
Operating temperature		–10 to +60	°C	

* +27V (Max.) when clock width < 10 µs, duty factor < 0.1%.

Bias Conditions

Item	Symbol	Min.	Typ.	Max.	Unit	Remarks
Output amplifier drain voltage	V_{DD}	14.55	15.0	15.45	V	
Reset drain voltage	V_{RD}	14.55	15.0	15.45	V	$V_{RD}=V_{DD}$
Output amplifier gate voltage	V_{GG}	1.75	2.0	2.25	V	
Output amplifier source	V_{SS}	Ground through 390 Ω resistor				± 5%
Substrate voltage adjustment range	V_{SUB}	9.0		18.5	V	*2
Fluctuation range after substrate voltage adjustment	Δ V_{SUB}	−3		+3	%	
Reset gate clock voltage adjustment range	V_{RGL}	1.0		4.0	V	*2 *6
Fluctuation range after reset gate clock voltage adjustment	Δ V_{RGL}	−3		+3	%	
Protective transistor bias	V_L	*3				

DC Characteristics

Item	Symbol	Min.	Typ.	Max.	Unit	Remarks
Output amplifier drain current	I_{DD}		5		mA	
Input current	I_{IN1}			1	μA	*4
Input current	I_{IN2}			10	μA	*5

*2 Substrate voltage (V_{SUB}) • reset gate clock voltage (V_{RGL}) setting value display.
Setting values of substrate voltage and reset gate clock voltage are displayed at the back of the device through a code address. Adjust substrate voltage (V_{SUB}) and reset gate clock voltage (V_{RGL}) to the displayed voltage. Fluctuation range after adjustment is ± 3%.

V_{SUB} code address–1 digit display
V_{RGL} code address–1 digit display

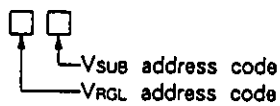

Code addresses and actual numerical values correspond to each other as follows.

V_{RGL} address code	1	2	3	4	5	6	7
Numerical value	1.0	1.5	2.0	2.5	3.0	3.5	4.0

V_{SUB} address code	E	f	G	h	J	K	L	m	N	P	Q	R	S	T	U	V	W	X	Y	Z
Numerical value	9.0	9.5	10.0	10.5	11.0	11.5	12.0	12.5	13.0	13.5	14.0	14.5	15.0	15.5	16.0	16.5	17.0	17.5	18.0	18.5

<Example> "5L" → V_{RGL}=3.0V
V_{SUB}=12.0V

*3 V_L setting is the V_{VL} voltage of the vertical transfer clock waveform.

*4 1. Current to each pin when 18V is applied to V_{DD}, V_{OUT}, Vss and SUB pins, while pins that are not tested are grounded.
2. Current to each pins when 20V is applied sequentially to V φ 1, V φ 2, V φ 3, V φ 4, H φ 1 and H φ 2, while pins that are not tested are grounded. However, 20V is applied to SUB.
3. Current to each pins when 15V is applied sequentially to pins RG, LH φ 1 and V_{GG}, while pins that are not tested are grounded. However, 15V is applied to SUB.
4. Current to V_L pin when it is grounded, while 30V is applied to all pins except pins that are not tested. However, GND and SUB pins are kept open.

*5 Current to SUB pin when 55V is applied to SUB pin, while pins that are not tested are grounded.

Clock Voltage Conditions

Item	Symbol	Min.	Typ.	Max.	Unit	Waveform diagram	Remarks
Read out clock voltage	V_{VT}	14.55	15.0	15.45	V	1	
Vertical transfer clock voltage	V_{VH1}, V_{VH2}	–0.05	0	0.05	V	2	$V_{VH}=(V_{VH1}+V_{VH2})/2$
	V_{VH3}, V_{VH4}	–0.2	0	0.05	V	2	
	V_{VL1}, V_{VL2}, V_{VL3}, V_{VL4}	–9.6	–9.0	–8.5	V	2	$V_{VL}=(V_{VL3}+V_{VL4})/2$
	$V\phi_V$	8.3	9.0	9.65	V	2	$V\phi_V=V_{VHn}-V_{VLn}$ (n=1 to 4)
	$\lvert V_{VH1} - V_{VH2} \rvert$			0.1	V	2	
	$V_{VH3}-V_{VH}$	–0.25		0.1	V	2	
	$V_{VH4}-V_{VH}$	–0.25		0.1	V	2	
	V_{VHH}			0.5	V	2	High level coupling
	V_{VHL}			0.5	V	2	High level coupling
	V_{VLH}			0.5	V	2	Low level coupling
	V_{VLL}			0.5	V	2	Low level coupling
Horizontal transfer clock voltage	$V\phi_H$	4.75	5.0	5.25	V	3	
	V_{HL}	–0.05	0	0.05	V	3	
Horizontal final stage transfer clock voltage	V_{LHH}	4.75	5.0	5.25	V	4	
	V_{LHL}	–0.05	0	0.05	V	4	
Reset gate clock voltage	$V\phi_{RG}$	4.5	5.0	5.5	V	5	*6
	$V_{RGLH}-V_{RGLL}$			0.8	V	5	Low level coupling
Substrate clock voltage	$V\phi_{SUB}$	23.0	24.0	25.0	V	6	

*6 No adjustment of reset gate clock voltage is necessary when reset gate clock is driven as indicated below. In this case, reset gate clock voltage set point displayed on back of image sensor has no meaning.

Item	Symbol	Min.	Typ.	Max.	Unit	Waveform diagram	Remarks
Reset gate clock voltage	V_{RGL}	−0.2	0	0.2	V	5	
	$V\phi_{RG}$	8.5	9.0	9.5	V	5	

Clock Equivalent Circuit Constant

Item	Symbol	Min.	Typ.	Max.	Unit	Remarks
Capacitance between vertical transfer clock and GND	$C\phi_{V1}$, $C\phi_{V3}$		1800		pF	
	$C\phi_{V2}$, $C\phi_{V4}$		2200		pF	
Capacitance between vertical transfer clocks	$C\phi_{V12}$, $C\phi_{V34}$		450		pF	
	$C\phi_{V23}$, $C\phi_{V41}$		270		pF	
Capacitance between horizontal transfer clock and GND	$C\phi_{H1}$, $C\phi_{H2}$		62		pF	
Capacitance between horizontal transfer clocks	$C\phi_{HH}$		47		pF	
Capacitance between horizontal final stage transfer clock and GND	$C\phi_{LH}$		8		pF	
Capacitance between reset gate clock and GND	$C\phi_{RG}$		8		pF	
Capacitance between substrate clock and GND	$C\phi_{SUB}$		400		pF	
Vertical transfer clock serial resistor	R_1, R_2, R_3, R_4		68		Ω	
Vertical transfer clock ground resistor	RGND		15		Ω	

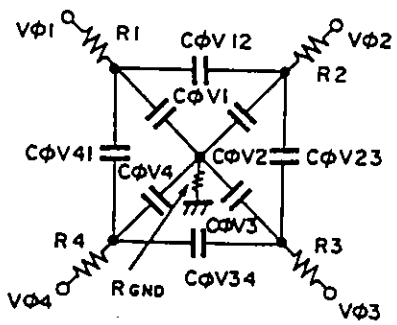

Vertical transfer clock equivalent circuit

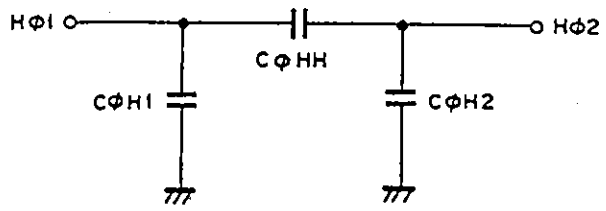

Horizontal transfer clock equivalent circuit

Drive Clock Waveform Conditions

(1) Read out clock waveform

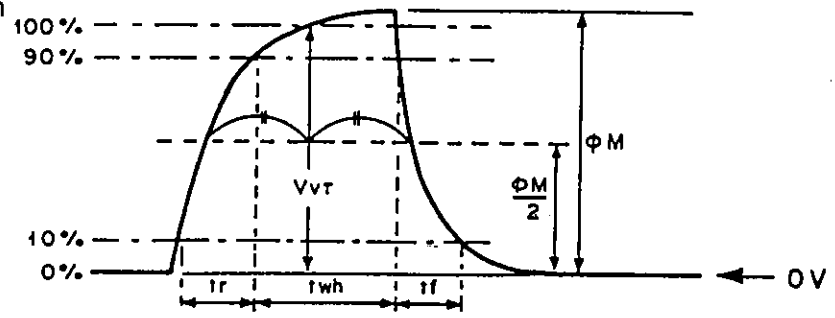

(2) Vertical transfer clock waveform

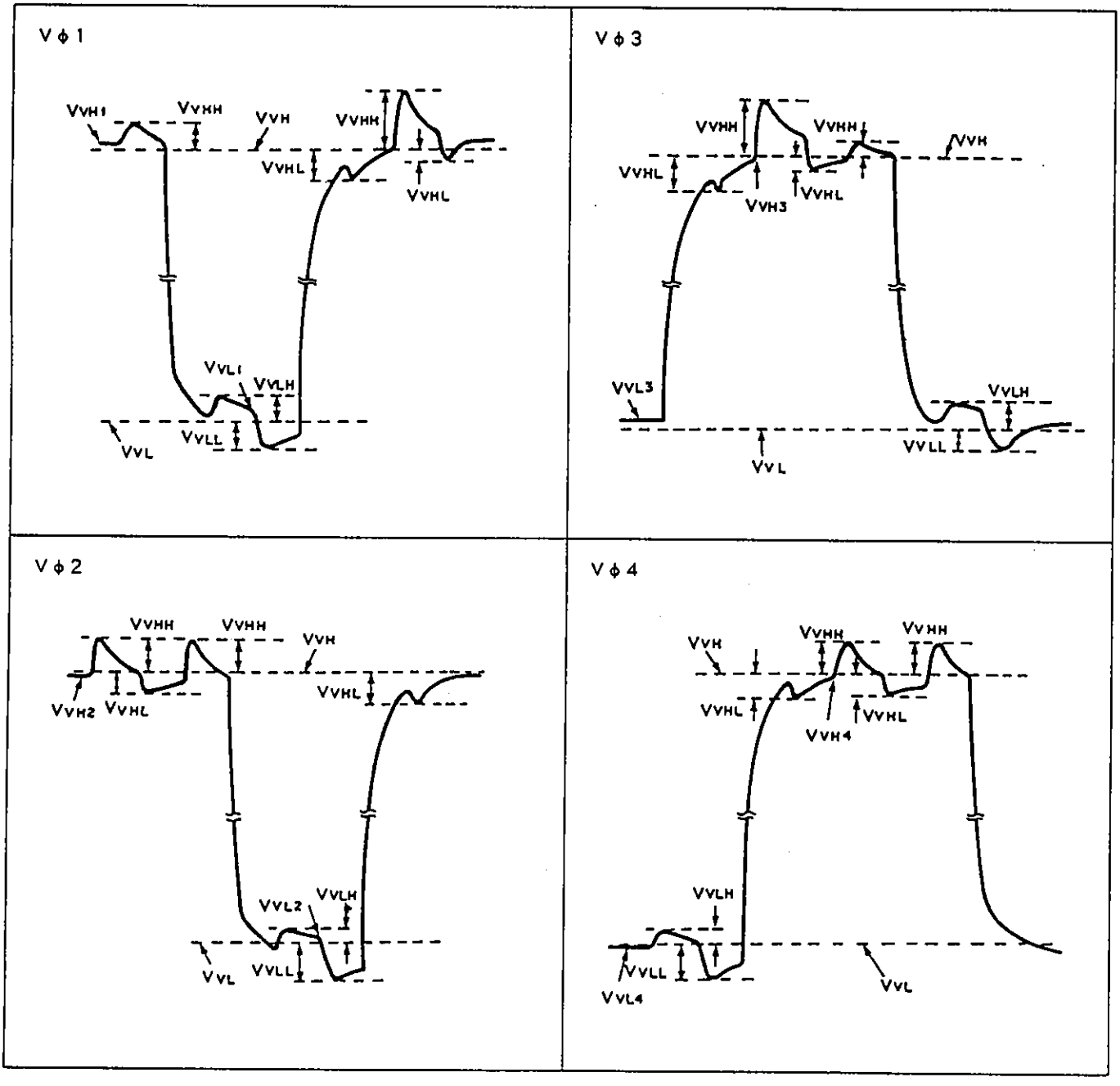

(3) Horizontal transfer clock waveform diagram

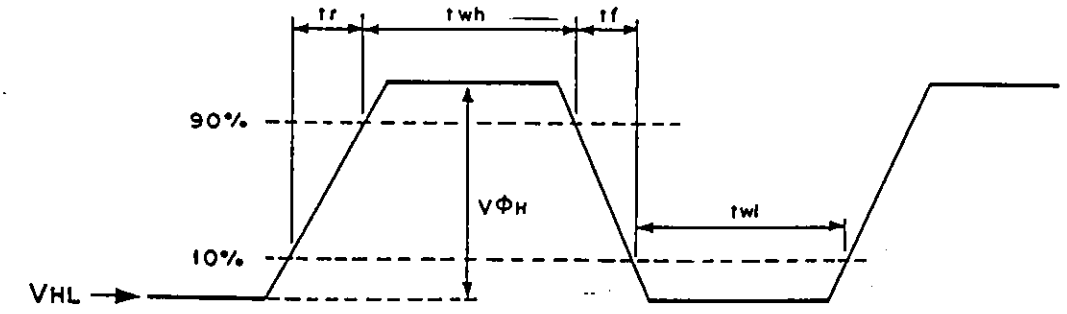

(4) Horizontal final stage transfer clock waveform diagram

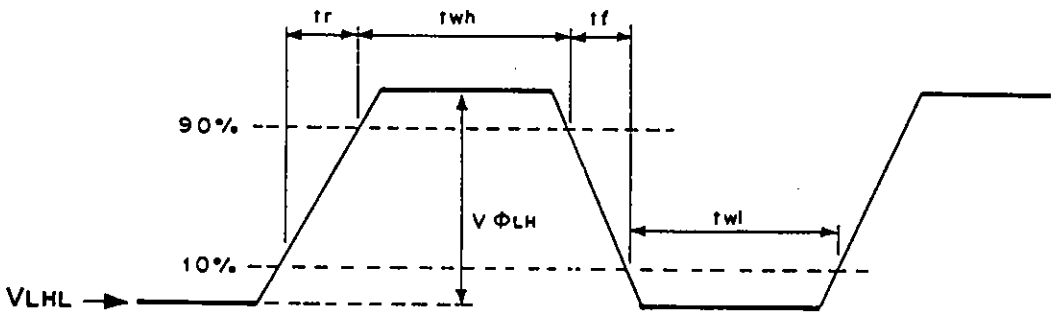

(5) Reset gate clock waveform diagram

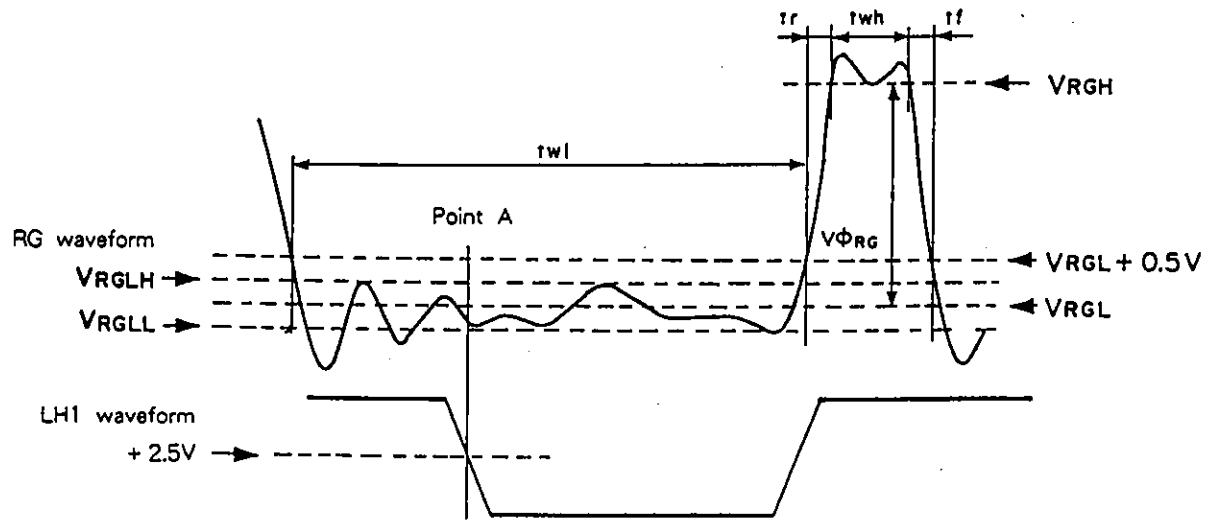

V_{RGLH} is the maximum value and V_{RGLL} the minimum value of the coupling waveform in the period from Point A in the diagram above to RG rise.

V_{RGL} is the mean value for V_{RGLH} and V_{RGLL}.

$$V_{RGL}=(V_{RGLH}+V_{RGLL})/2$$

V_{RGH} is the minimum value for twh period.

$$V\phi_{RG}=V_{RGH}-V_{RGL}$$

(6) Substrate clock waveform

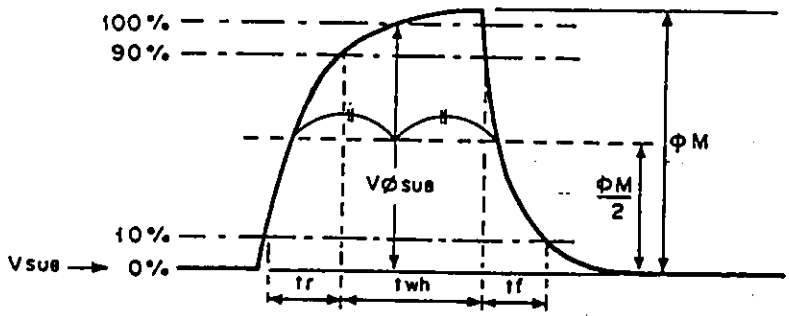

Clock switching characteristics

Item	Symbol	twh			twl			tr			tf			Unit	Remarks
		Min.	Typ.	Max.	Min.	Typ.	Max.	Min.	Typ.	Max.	Min.	Typ.	Max.		
Read out clock	V_T	2.3	2.5						0.5			0.5		μs	During read out
Vertical transfer clock	Vφ1, Vφ2, Vφ3, Vφ4										0.015		0.25	μs	*7
Horizontal transfer clock	Hφ		20			20			15	19	*8	15	19	ns	During imaging
Horizontal final stage clock	LHφ		20			20			15	19	*8	15	19	ns	During imaging
Horizontal transfer/horizontal final stage clock	Hφ1, LHφ		5.38						0.01			0.01		μs	During parallel serial conversion.
Horizontal transfer clock	Hφ2					5.38			0.01			0.01		μs	
Reset gate clock	ϕ_{RG}	11	13			51			3			3		ns	
Substrate clock	ϕ_{SUB}	1.5	1.8							0.5			0.5	μs	During charge drain.

*7 When vertical transfer clock driver CXD1250 is in use.
*8 tf ≧ tr–2 ns

Item	Symbol	two			Unit	Remarks
		Min.	Typ.	Max.		
Horizontal transfer clock	Hφ	16	20		ns	*9
Horizontal transfer/ horizontal final stage clock	Hφ2, LHφ	16	20		ns	*10

*9 "two" is the overlap period of horizontal transfer clocks Hφ1 and Hφ2's twh and twl.
*10 "two" is the overlap period of horizontal transfer clock Hφ2's twl and horizontal final stage transfer clock LHφ's twh'

Operating Characteristics

(Ta=25℃)

Item	Symbol	Min.	Typ.	Max.	Unit	Test method	Remarks
Sensitivity	S	300	380		mV	1	
Saturation signal	Vsat	600			mV	2	Ta=60℃
Smear	Sm		0.009	0.015	%	3	
Video signal shading	SH			20	%	4	Zone 0, I
				25	%	4	Zone 0 to II'
Dark signal	Vdt			2	mV	5	Ta=60℃
Dark signal shading	Δ Vdt			1	mV	6	Ta=60℃
Flicker	F			2	%	7	
Lag	Lag			0.5	%	8	

Zone chart of Video signal shading

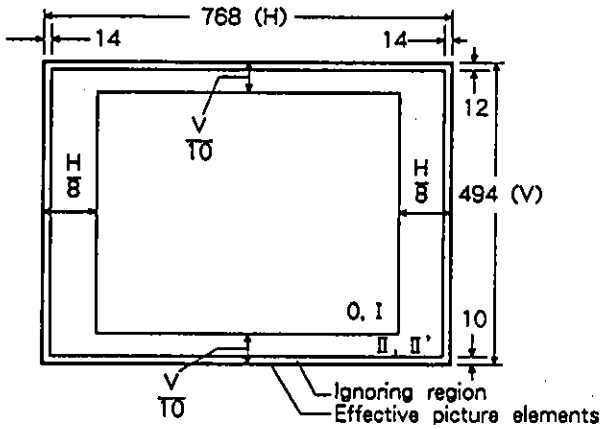

Image Sensor Characteristics Test Method

◎ Test conditions

① Through the following tests the substrate voltage and reset gate clock voltage are set to the value displayed on the device, while the device drive conditions are at the typical value of the bias and clock voltage conditions.

② Through the following tests defects are excluded and, unless otherwise specified, the optical black level (Hence forth referred to as OB) is set as the reference, the values obtained at Ⓐ point in the figure of the Drive Circuit are utilized.

◎ Definition of standard imaging conditions

① Standard imaging condition I: (As imaging device) Use a pattern box (luminance 706 cd/ m^2, color temperature 3200K Halogen source) as a subject. (Pattern for evaluation is not applicable.) Use a testing standard lens with CM500S (t=1.0mm) as IR cut filter and image at F8. At this time, light intensity to sensor receiving surface is defined as standard sensitivity testing light intensity. Signal output average value in this condition is called V_A.

② Standard imaging condition II: Image a light source (color temperature of 3200K) which uniformity of brightness is within 2% at all angles. Use a testing standard lens with CM500S (t=1.0mm) as IR cut filter. The light intensity is adjusted to the value indicated in each testing item by lens diaphragm.

1. Sensitivity
   Set to standard image condition I. After selecting the electronic shutter mode at a 1/250s. shutter speed, measure the signal (Vs) at the center of the screen and substitute in the following formula.

$$S = Vs \times \frac{250}{60}$$

2. Saturation signal
   Set to standard imaging condition II. Adjust light intensity to 10 times that of signal output average value (V_A=200mV), then test signal output minimum value.

3. Smear
   Set to standard imaging condition II. Adjust light intensity to 500 times that of signal output average value (V_A=200mV). Stop read out clock. When the charge drain executed by the electric shutter at the respective H blankings takes place, test the maximum value Vsm of signal output.

$$Sm = \frac{Vsm}{200} \times \frac{1}{500} \times \frac{1}{10} \times 100\ (\%)\ (1/10V)$$

4. Video signal shading
   Set to standard imaging condition II. Adjust light intensity to signal output average value (V_A=200mV) with lens diaphragm at F5.6 to F8. Then test maximum (Vmax) and minimum (Vmin) values of signal output.

   SH=(Vmax–Vmin)/200 × 100 (%)

5. Dark signal
   Test signal output average value Vdt when the device ambient temperature is at 60 ℃ and light is obstructed with horizontal idle transfer level as reference.

6. Dark signal shading
   Following 5, test maximum (Vdmax) and minimum (Vdmin) values of dark signal output.

   Δ Vdt=Vdmax–Vdmin

7. Flicker

Set to standard imaging condition II. Adjust light intensity to signal output average value (V_A=200mV). Then test the signal output difference (Δ Vf) between even field and odd field.

$F=(\Delta Vf/200) \times 100$ (%)

8. Residual image

Adjust signal output value (Vs) by strobe light to 200mV. Then light a stroboscopic tube with the following timing and test the residual image (Vlag).

Lag = (Vlag/Vs) × 100 (%)

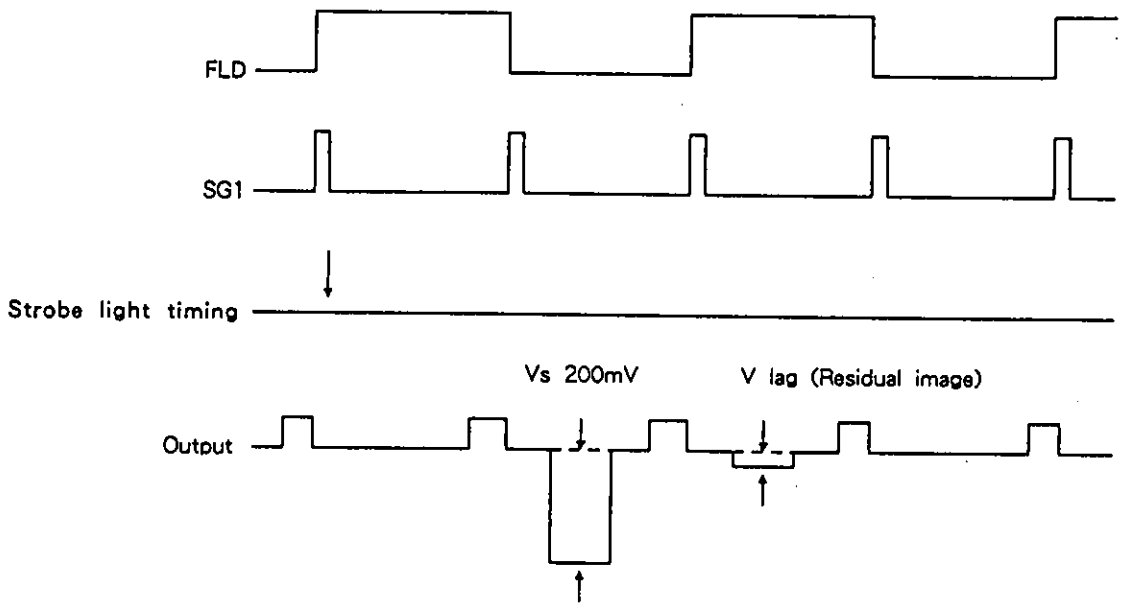

Drive Circuit

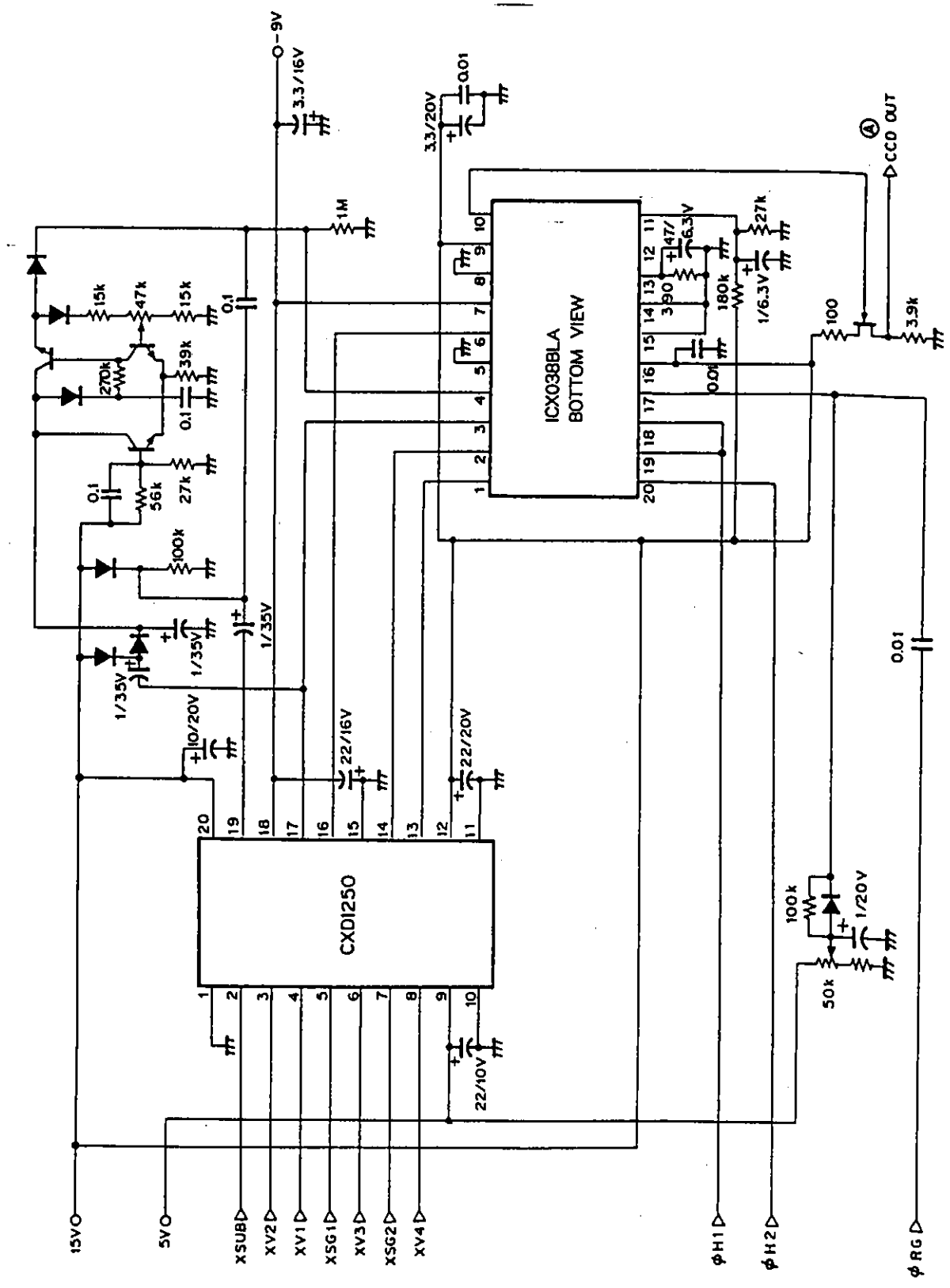

Spectral Sensitivity Characteristics

(Excluding light source characteristics, including lens characteristics)

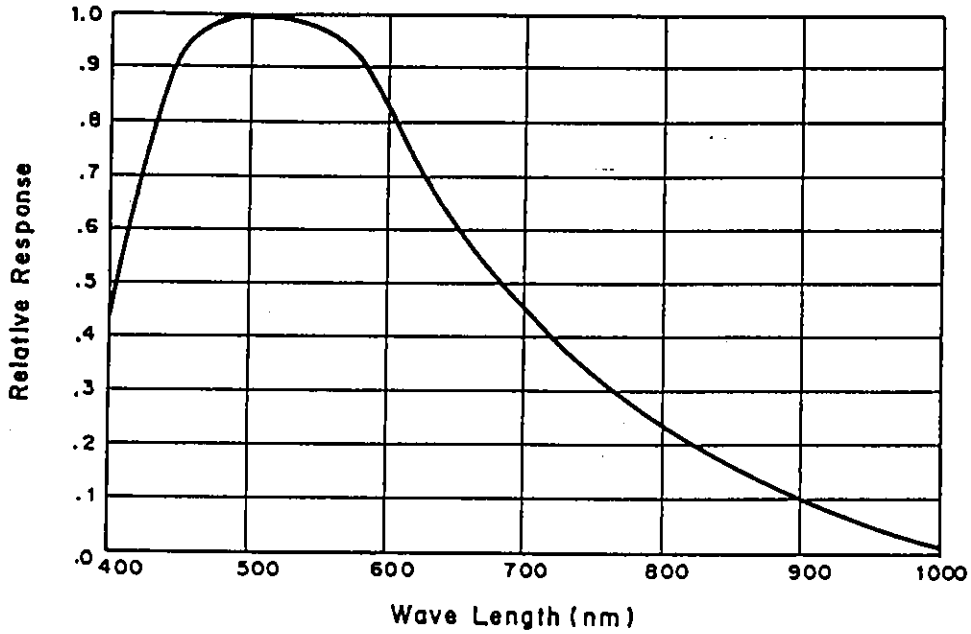

Using read out clock timing chart

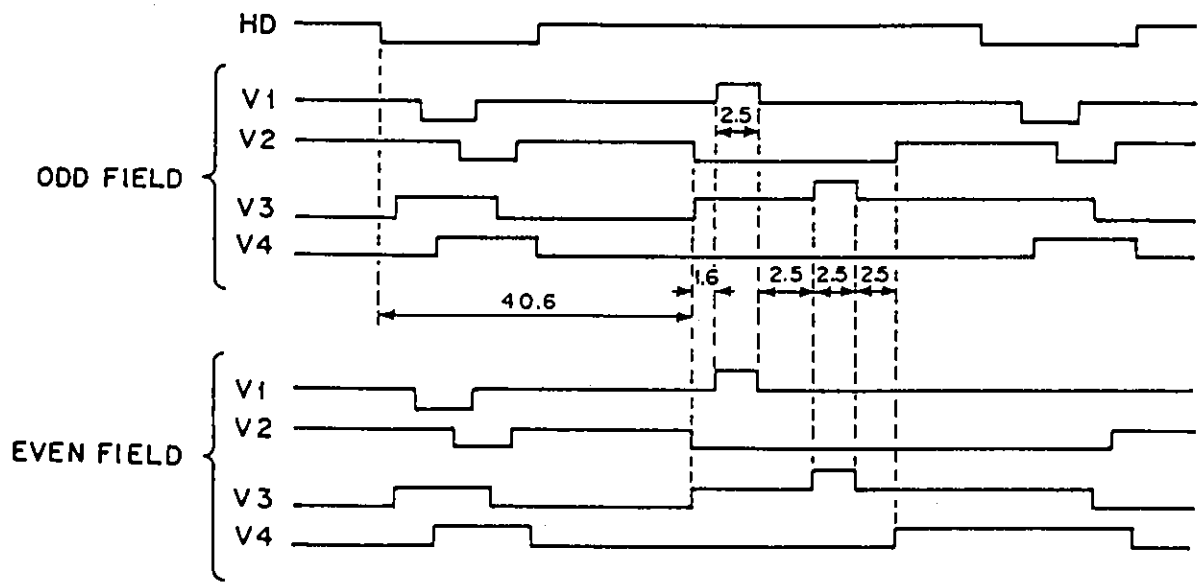

Unit : µs

Drive Timing Chart (Vertical sync)

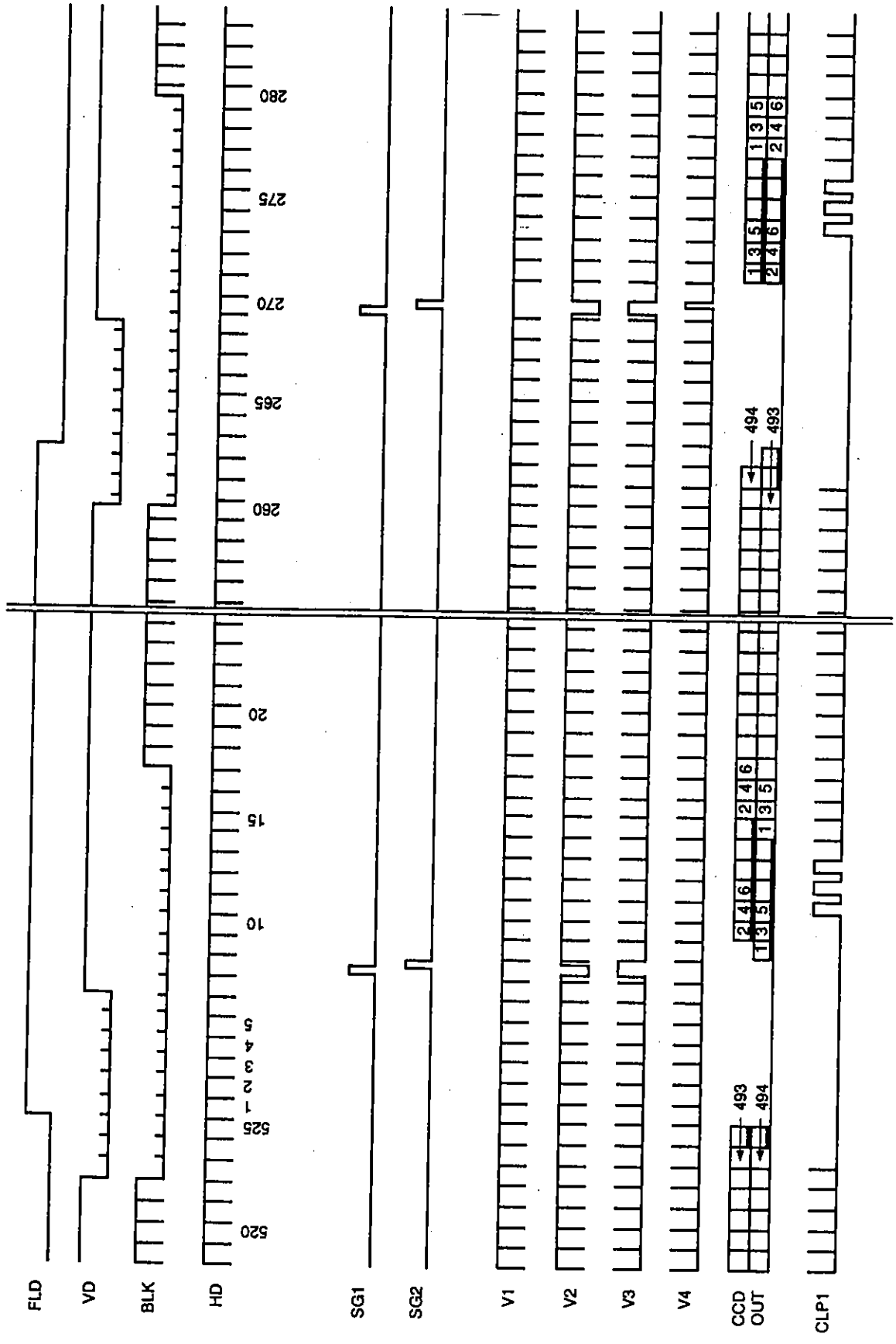

Drive Timing Chart (Horizonral sync)

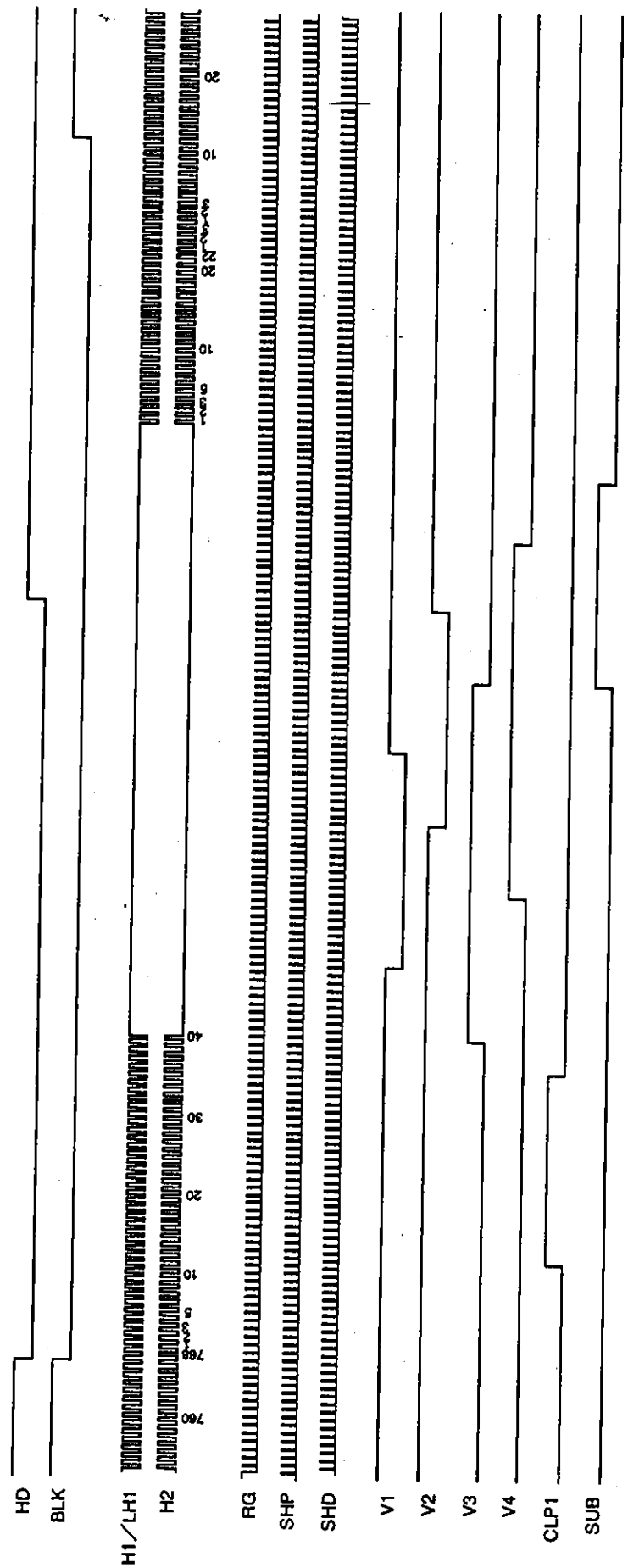

Notes on Handling

1) Static charge prevention

CCD image sensors are easily damaged by static discharge. Before handling be sure to take the following protective measures.

a) Either handle bare handed or use non-chargeable gloves, clothes or material. Also use conductive shoes.
b) When handling directly use an earth band.
c) Install a conductive mat on the floor or working table to prevent the generation of static electricity.
d) Ionized air is recommended for discharge when handling CCD image sensor.
e) For the shipment of mounted substrates use boxes treated for the prevention of static charges.

2) Soldering

a) Make sure the package temperature does not exceed 80°C.
b) Solder dipping in a mounting furnace causes damage to the glass and other defects. Use a grounded 30W soldering iron and solder each pin in less than 2 seconds. For repairs and remount, cool sufficiently.
c) To dismount an imaging device do not use a solder suction equipment. When using an electric desoldering tool use a thermal controller of the zero cross On/Off type and connect to ground.

3) Dust and dirt protection

Image sensors are packed and delivered by taking care of protecting its glass plates from harmful dust and dirt. Clean glass plates with the following operation as required, and use them.

a) Operate in clean environments (around class 1000 will be appropriate).
b) Do not either touch glass plates by hand or have any object come in contact with glass surfaces. Should dirt stick to a glass surface blow it off with an air blow. (For dirt stuck through static electricity ionized air is recommended.)
c) Clean with a cotton bud and ethyl alcohol if the glass surface is grease stained. Be careful not to scratch the glass.
d) Keep in a case to protect from dust and dirt. To prevent dew condensation, preheat or precool when moving to a room with great temperature differences.
e) When a protective tape is applied before shipping, just before use remove the tape applied for electrostatic protection. Do not reuse the tape.

4) Do not expose to strong light (sun rays) for long periods.

For continuous using under cruel condition exceeding the normal using condition, consult our company.

5) Exposure to high temperatures or humidity will affect the characteristics. Accordingly avoid storage or usage in such conditions.

6) CCD image sensor are precise optical equipment that should not be subject to too much mechanical shocks.

Package Outline Unit: mm

20pin DIP (600mil)

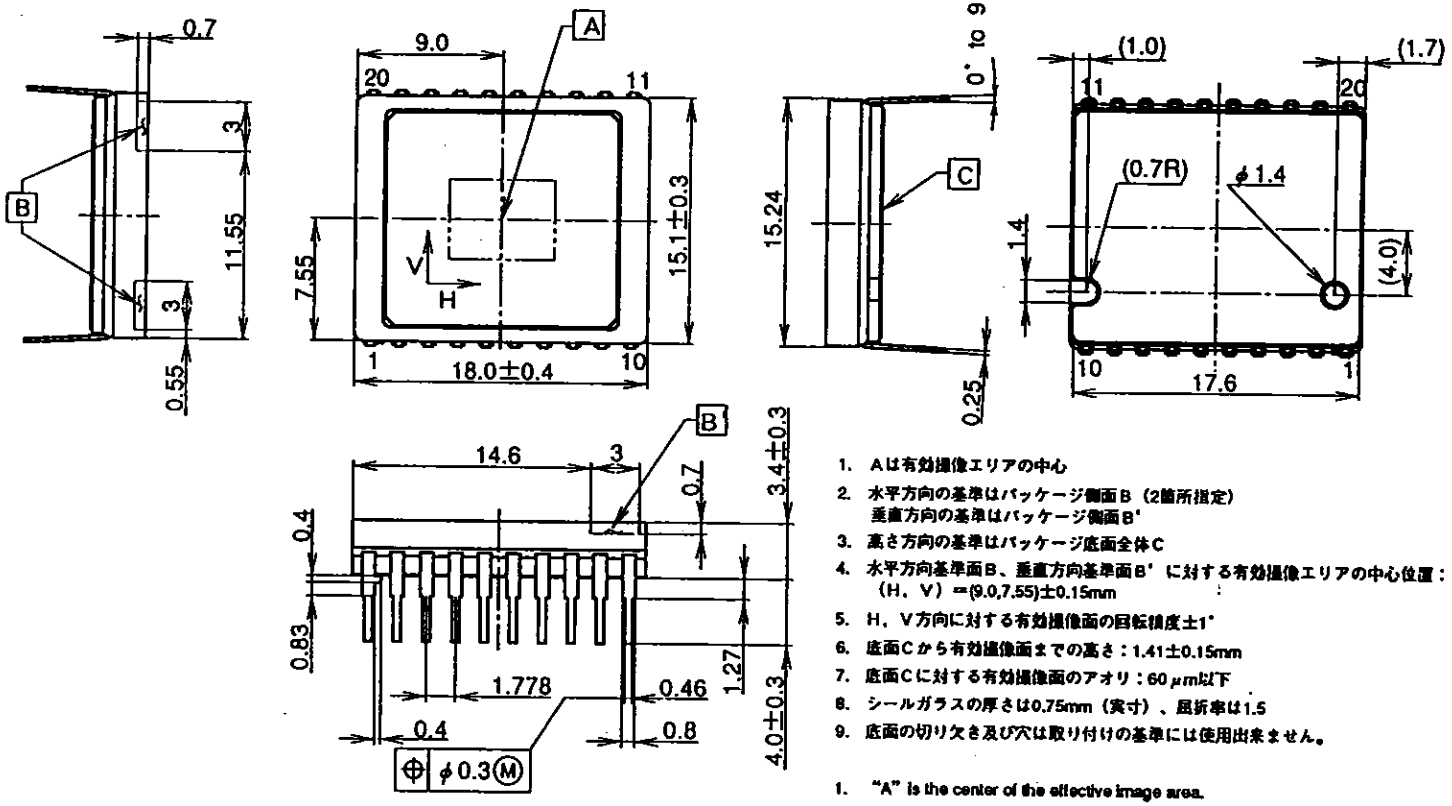

1. Aは有効撮像エリアの中心
2. 水平方向の基準はパッケージ側面B（2箇所指定）
   垂直方向の基準はパッケージ側面B'
3. 高さ方向の基準はパッケージ底面全体C
4. 水平方向基準面B、垂直方向基準面B'に対する有効撮像エリアの中心位置：
   （H，V）＝(9.0,7.55)±0.15mm
5. H，V方向に対する有効撮像面の回転精度±1°
6. 底面Cから有効撮像面までの高さ：1.41±0.15mm
7. 底面Cに対する有効撮像面のアオリ：60μm以下
8. シールガラスの厚さは0.75mm（実寸）、屈折率は1.5
9. 底面の切り欠き及び穴は取り付けの基準には使用出来ません。

1. "A" is the center of the effective image area.
2. The two points "B" of the package are the horizontal reference.
   The point "B'" of the package is the vertical reference.
3. The bottom "C" of the package is the height reference.
4. The center of the effective image area, relative to "B" and "B'" is
   （H，V）＝(9.0,7.55)±0.15mm.
5. The rotation angle of the effective image area relative to H and V is ±1°.
6. The height from the bottom "C" to the effective image area is 1.41±0.15mm.
7. The tilt of the effective image area relative to the bottom "C" is less than 60μm.
8. The thickness of the cover glass is 0.75mm, and the refractive index is 1.5.
9. The notch and the hole on the bottom must not be used for reference of fixing.

PACKAGE STRUCTURE

PACKAGE MATERIAL	Cer-DIP
LEAD TREATMENT	TIN PLATING
LEAD MATERIAL	42ALLOY
PACKAGE WEIGHT	2.6g